MORCINCH™ Drum Holder Assembly

Used on 185A, 185A-HD, 285A, 285A-HD, 400, 410, 510, 520, 515 and 525 Series
with Serial Number 420550 to _____

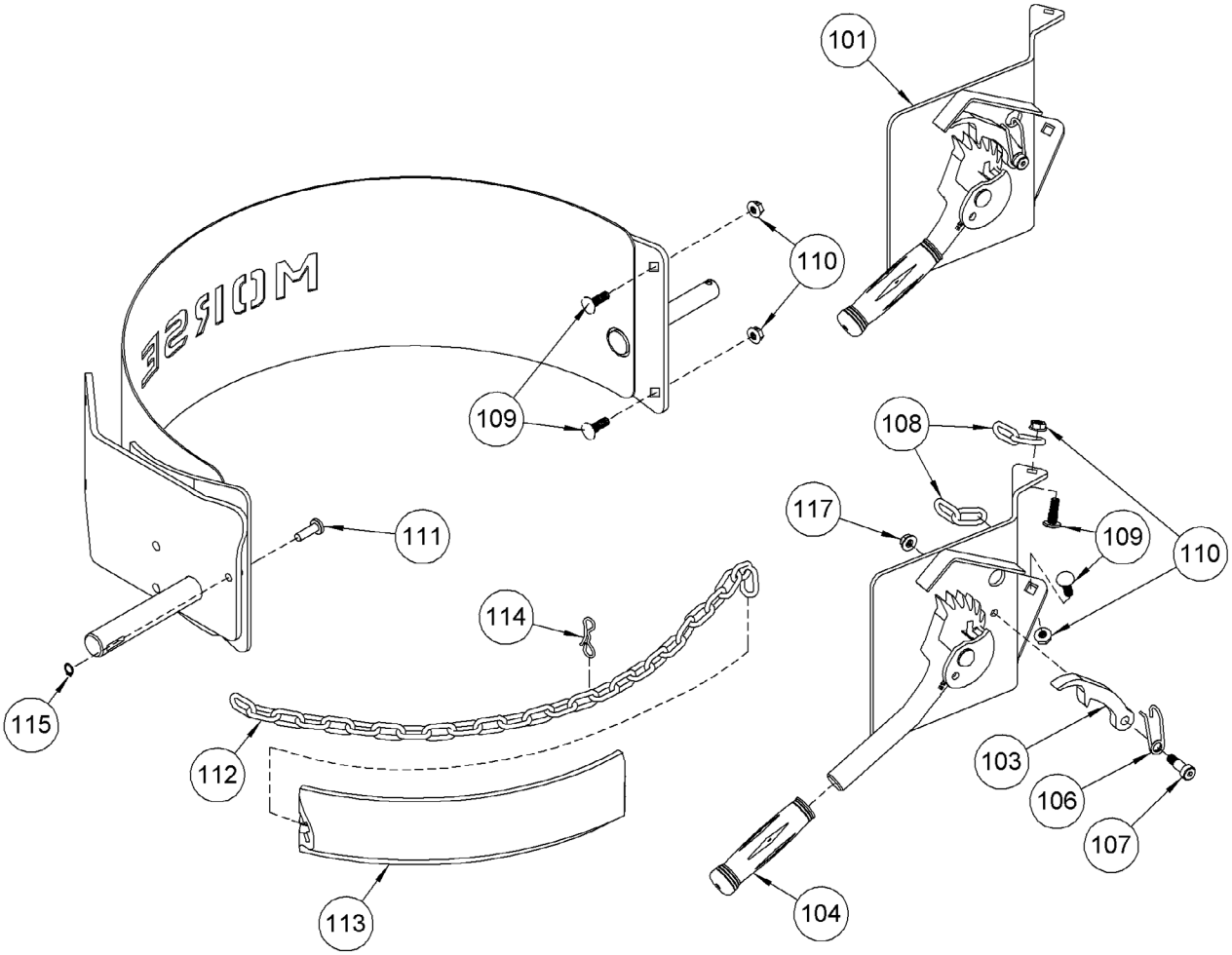

ITEM	QTY.	PART #	DESCRIPTION
101*	1	6871A-P	RATCHET PLATE CPT, SQ HOLE
103	1	168-P	PAWL, WITH DRILLED HOLE
104	1	136-P	GRIP, HANDLE 7/8” X 4-3/4”
106	1	169-P	SPRING, PAWL
107	1	170-P	SCREW, 3/8 DIA X 5/8 SHOULDER
108*	2	5019-P	CHAIN, HINGE, 9/32 ALLOY 2 LK
109*	4	6833-P	BOLT, 5/16-18 X 1 GR5 CAR

ITEM	QTY.	PART #	DESCRIPTION
110*	4	4178-P	NUT, 5/16-18 FLANGE LOCK, MOR
111*	1	4172SP-P	PIN, S.P., CINCH CHAIN, 5000-P
112*	1	5017-P	CHAIN, CINCH, 9/32, 38 LINK
113*	1	4414-P	COVER, CINCH CHAIN, FLEX PVC
114	1	4710-P	PIN, BOW TIE COTTER, MOR
115*	1	4744-P	SNAP RING, EXTERNAL, 3/8"
117	1	1634-P	NUT, 5/16-18 WHIZ LOCK

* Recommended spare parts.

Copyright 2024 - Morse Mfg. Co., Inc.